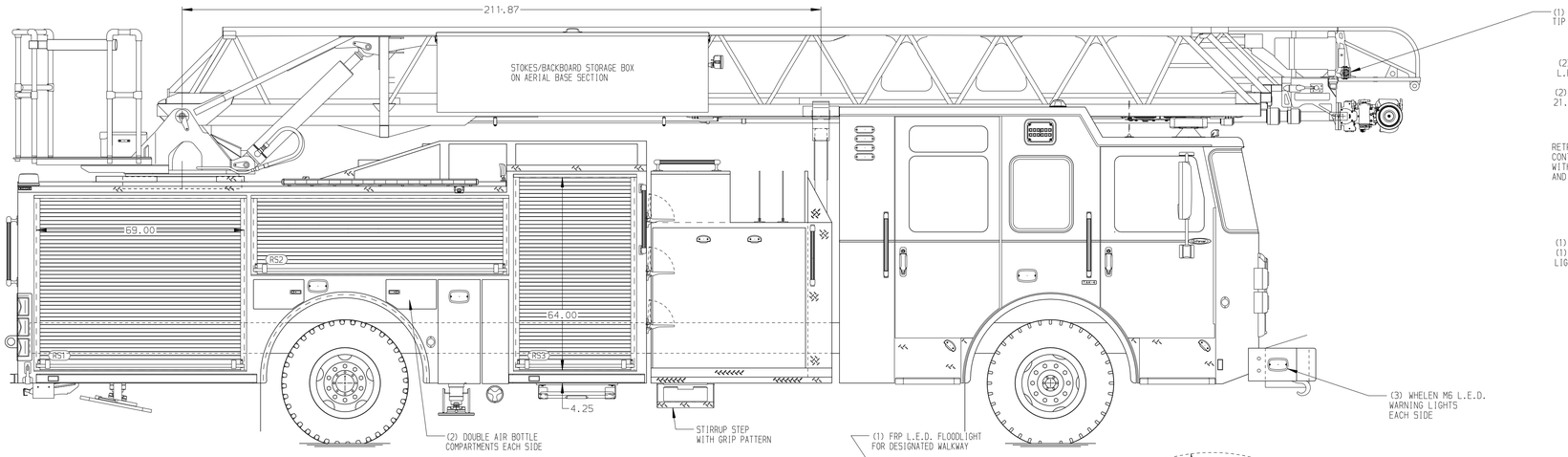

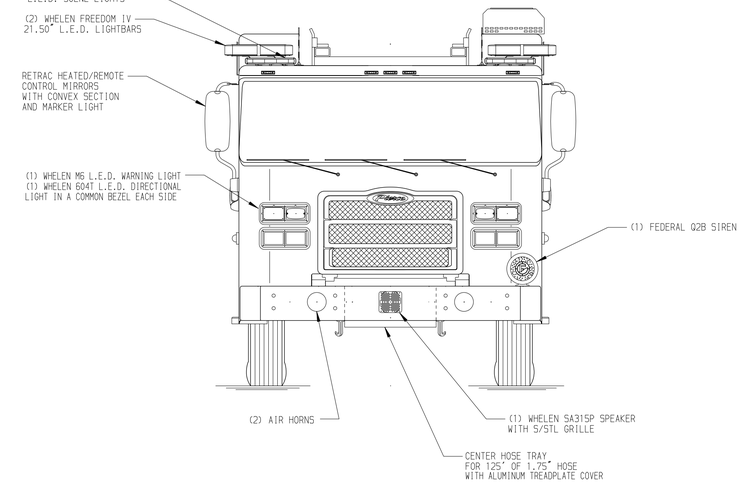

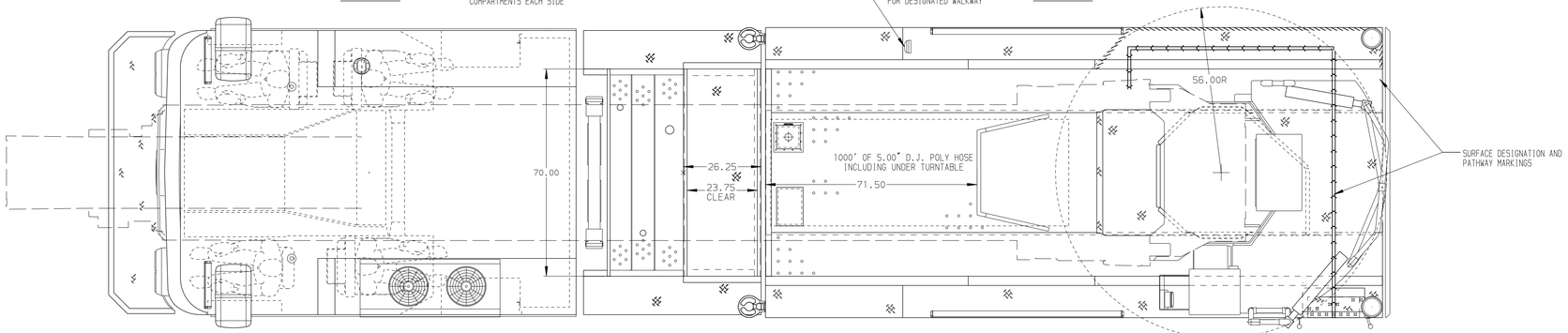

BODY	TOTAL TANK CAPACITY
107' ASL Aluminum Body	520 Gallon Poly Tank
COMPT,LEFT SIDE FRONT	WATER CAPACITY
Full Height Rollup Forward	500 Gallons of Water
COMPT,LEFT SIDE REAR	FOAM CELL CAPACITY
Full Height Rollup Rearward	20 Gallon Foam Cell
COMPT,RIGHT SIDE FRONT	FOAM SYSTEM
Full Height Rollup Forward	Plumbing for Future Husky Foam System
COMPT,RIGHT SIDE REAR	
Full Height Rollup Rearward	

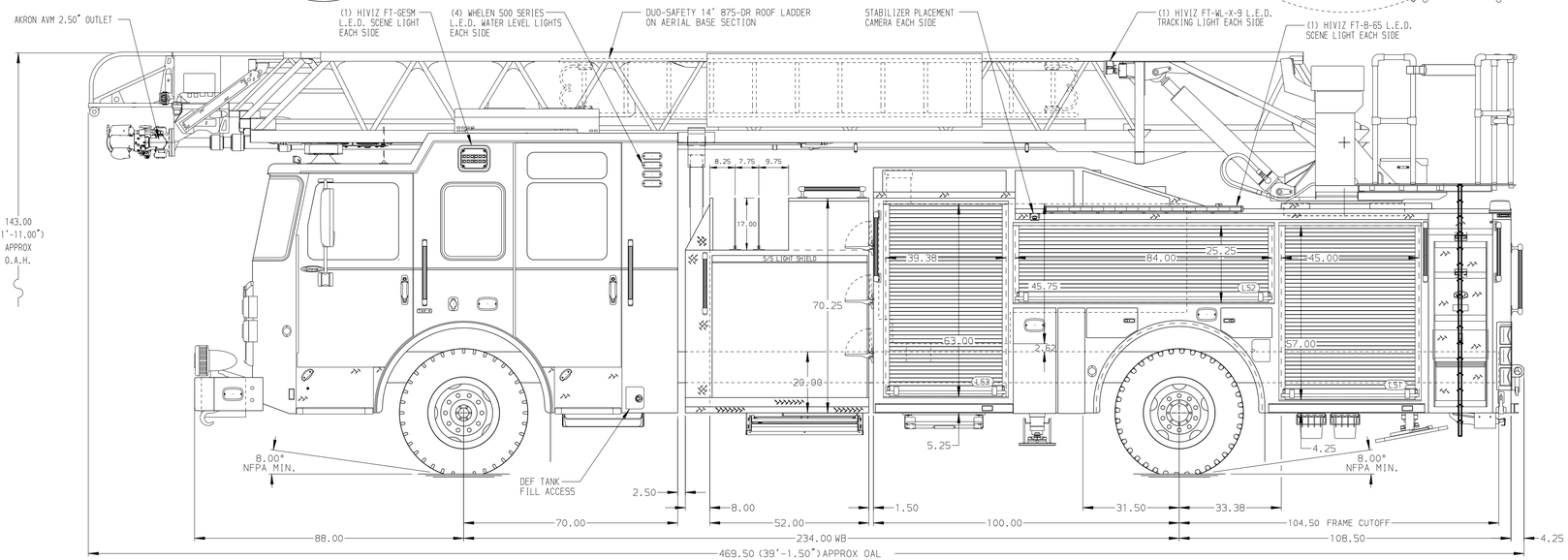

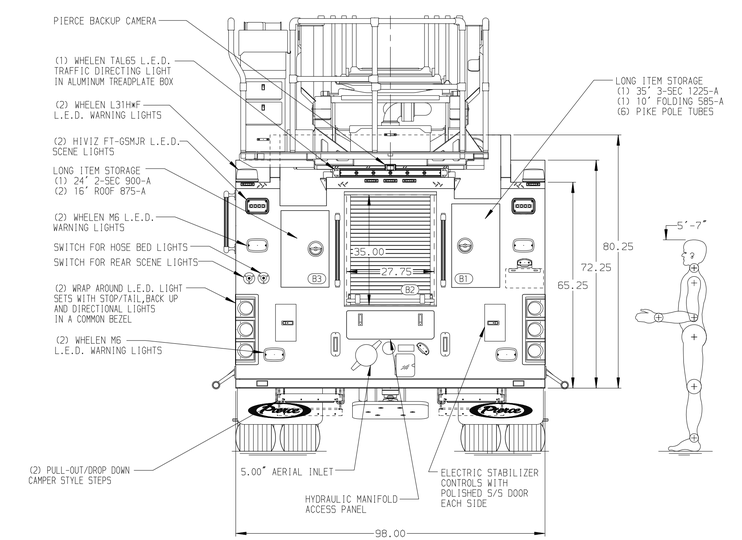

CHASSIS	CAB	AXLE,FRONT,CUSTOM	TRANSMISSION	PUMPHOUSE	CROSSLAYS,1.50"	SPEEDLAYS	-
Enforcer Chassis	7010 Enforcer Notched Cab	22,800 Lb TAK-4 Axle	Allison 6th Gen, 4000 EVS P	52" Control Zone Side Mount	(2) 1.50" Standard Capacity	Speedlays Not Required	-
ENGINE	BUMPER	AXLE,REAR		PUMP	CROSSLAYS,2.50"	GENERATOR	-
510 HP Paccar MX13 Engine	19" Extended Painted Steel	33,500 Lb Meritor Axle		2000 GPM Waterous CSU	(1) 2.50" Standard Capacity	Generator Not Required	

CUSTOMER APPROVAL

APPROVED BY:_____

DATE:_____

Pierce MANUFACTURING INC.

NOTE

DIMENSIONS SHOWN ARE APPROXIMATE AND ARE SUBJECT TO MINOR DEVIATIONS AS MAY OCCUR OR BE NECESSARY IN CONSTRUCTION.
MINOR DETAILS NOT SHOWN.

1. SHORELINE RECEPTACLE WITH KUSSMAUL SUPER AUTO-EJECT LOCATED ON DRIVER SIDE OF THE CAB
2. AIR INLET WITH DISCONNECT COUPLING LOCATED FORWARD IN THE DRIVER SIDE STEPWELL
3. BATTERY CHARGER LOCATED PER ORDER
4. BATTERY CHARGE INDICATOR LOCATED PER ORDER
5. ONE 1.50" OUTLET WITH 2.00" PIPING AND SWIVEL LOCATED IN CENTER BUMPER TRAY
6. FIVE ADJUSTABLE SHELVES LOCATED IN COMPARTMENTS PER ORDER
7. THREE FLOOR MOUNTED SLIDE-OUT TRAYS LOCATED IN COMPARTMENTS PER ORDER
8. RUNG LIGHTING ON AERIAL LADDER
9. ONE RECEPTACLE LOCATED PER ORDER
10. DUAL L.E.D. LIGHT STRIPS LOCATED IN COMPARTMENTS PER ORDER
11. TWO RECEPTACLE STRIPS LOCATED PER ORDER
12. ONE SWING-OUT TOOLBOARD LOCATED IN COMPARTMENT PER ORDER
13. ONE VERTICAL PARTITION LOCATED IN COMPARTMENT PER ORDER
14. ONE BACK WALL MOUNTED PEGBOARD LOCATED IN COMPARTMENT PER ORDER
15. 1500 GPM HIGH FLOW WATERWAY
16. LIMITED RETRACTION NOT REQUIRED
17. MOUNTING PROVISIONS FOR FRONT INLET
18. ONE CTECH (4) DRAWER CABINET PER ORDER

REV	DATE	BY	CH
V	20JUN25	LWE	AST

CHASSIS DATA	
MAKE	PIERCE
MODEL	ENFORCER
TITLE	107' ASCENDANT AERIAL LADDER AND BODY ASSEMBLY
FOR	SUMTER FIRE DEPARTMENT SUMTER, SC
DWG NO.	44249AD

JOB NO.	44249
SCALE	1:24
DATE	
DRAWN BY	LWE
	29APR25
CHECKED BY	AST
	2MAY25
SHEET SIZE	D
SHEET NO.	1 OF 1

View File Created 20-JUN-2025 10:43:02