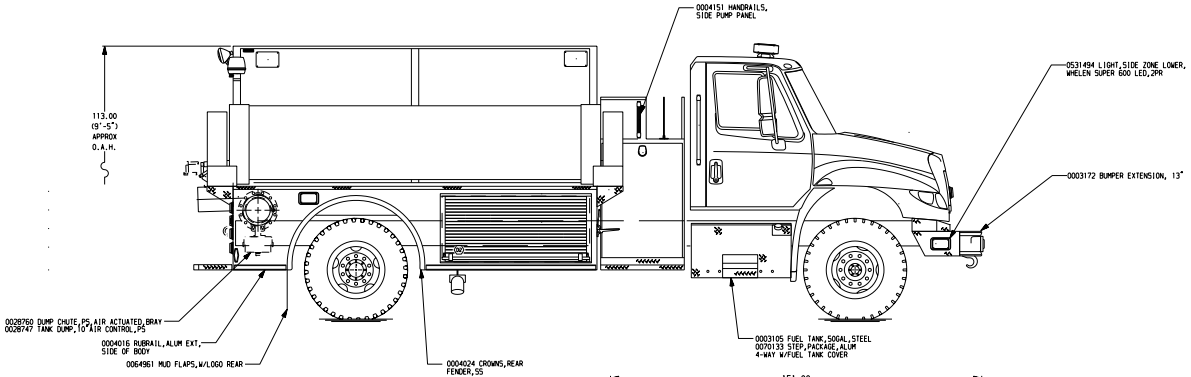

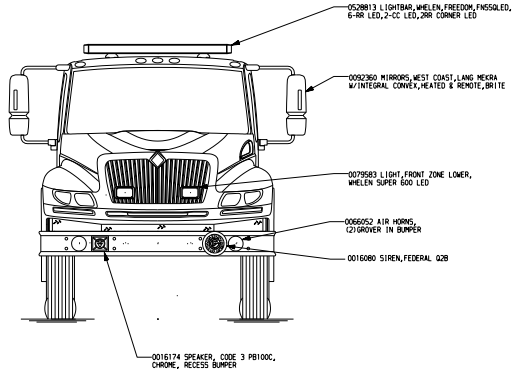

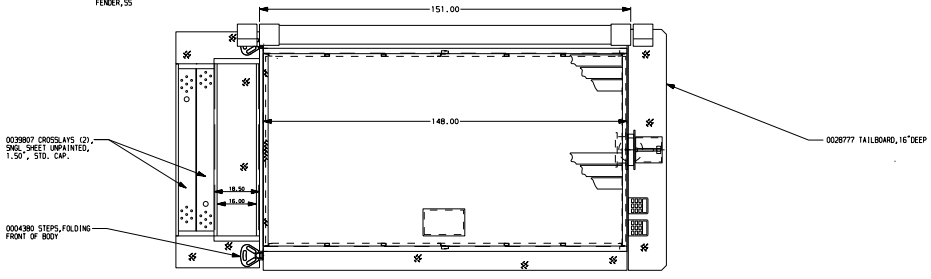

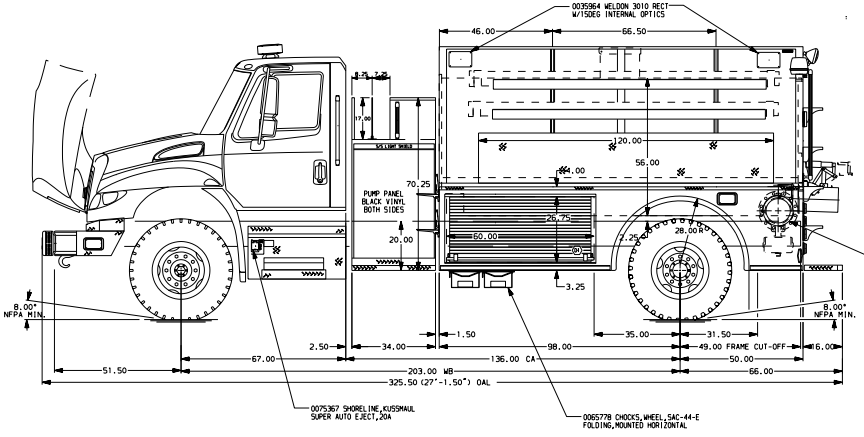

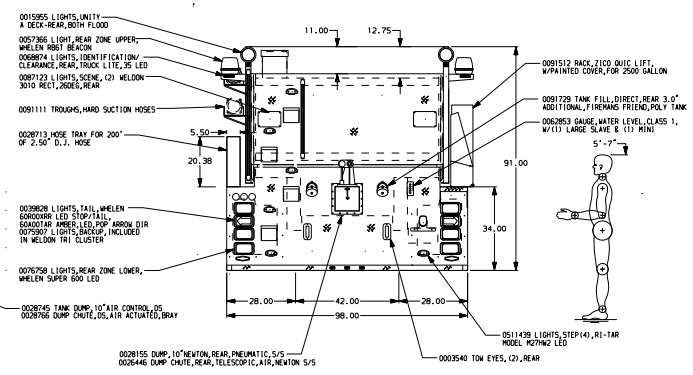

ALUMINUM BODY

NOTE
DIMENSIONS SHOWN ARE APPROXIMATE AND ARE SUBJECT TO MINOR DEVIATIONS AS MAY OCCUR OR BE NECESSARY IN CONSTRUCTION.
MINOR DETAILS NOT SHOWN.

Pierce MANUFACTURING INC.
BRADENTON, FLORIDA

REV	DATE	BY	CH
7	20MAR08	AIV	PK2
6	20FEB08	AIV	LMA
5	18JAN08	AIV	LMA
4	14JAN08	AIV	PK1

CHASSIS DATA — MAKE: IHC — MODEL: 4400

TITLE: 500-D-2000 POLY 148"BODY W/SIDE DUMPS 34"SIDE CONTROL (2)CROSSLAYS

FOR: LANCASTER COUNTY FIRE DEPARTMENT, LANCASTER, SOUTH CAROLINA

DWG NO. 20422AD

JOB NO. 20422 — SCALE 1:24 — DATE — DRAWN BY AIV 9NOV07 — CHECKED BY DCA 26MAR08 — SHEET SIZE D — SHEET NO. 1 OF 1

View File Created 26-MAR-2008 09:43:36