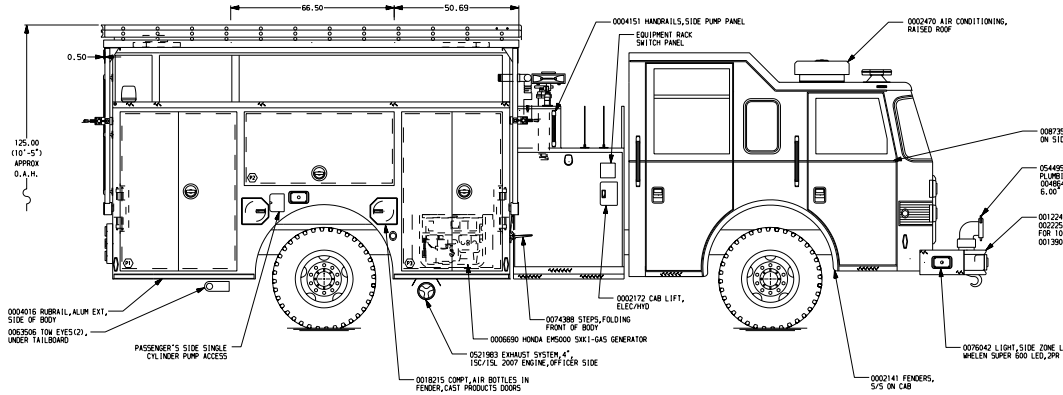

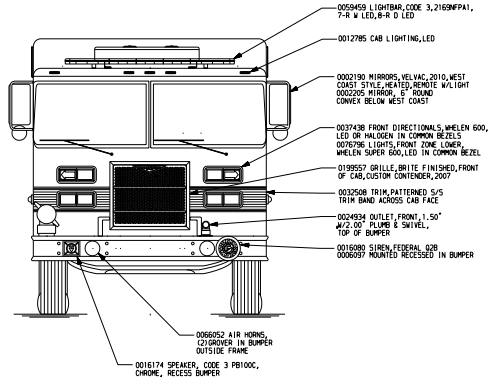

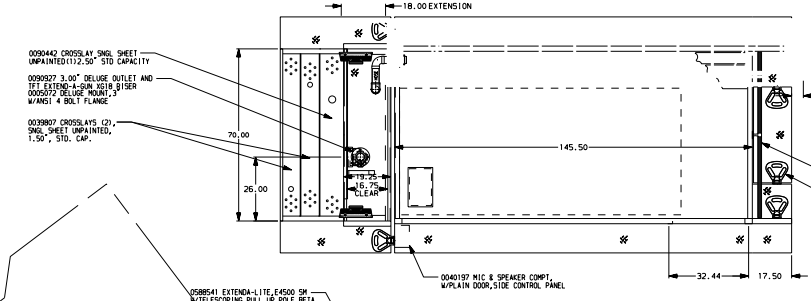

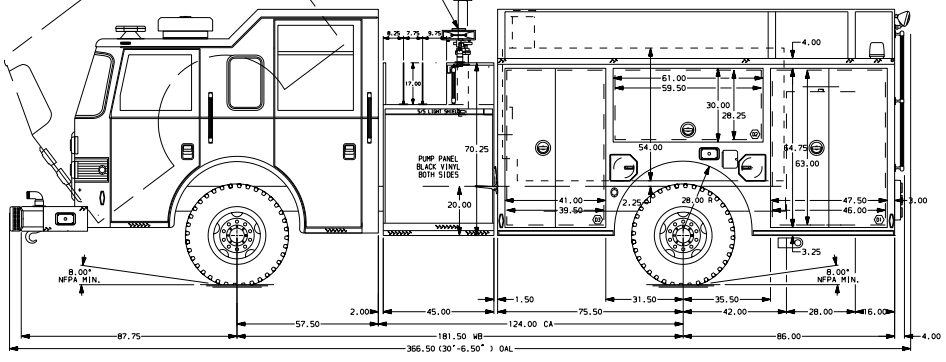

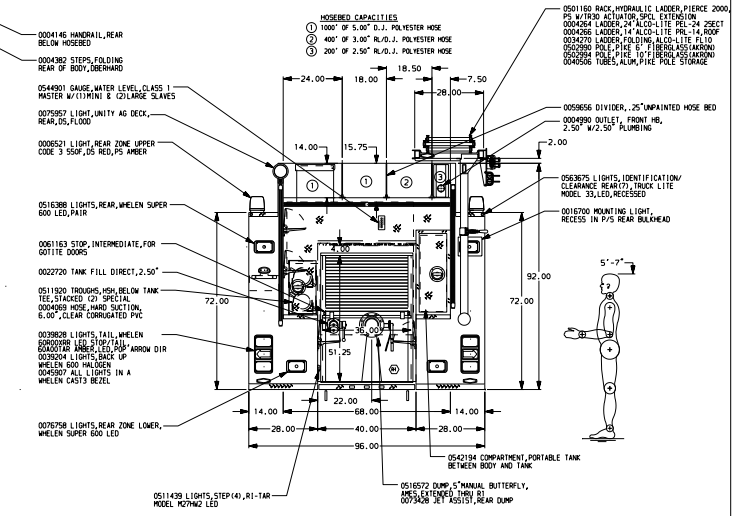

ALUMINUM BODY

NOTE

DIMENSIONS SHOWN ARE APPROXIMATE AND ARE SUBJECT TO MINOR DEVIATIONS AS MAY OCCUR OR BE NECESSARY IN CONSTRUCTION.
MINOR DETAILS NOT SHOWN.

REV.	DATE	BY	CHK'D	
				CHASSIS DATA
5	5MAR09	AIV	PK2	CHASSIS
4	24FEB09	AIV	NCA	PIERCE
3	23DEC08	AIV	PK1	MODEL
				CONTENDER

Pierce MANUFACTURING INC.
APPLETON,WISCONSIN

TITLE	1250-D-1000 POLY 161"BODY DSRPS FULL HEIGHT 45"SIDE CONTROL (2)CROSSLAYS (1)2.50"CROSSLAY	JOB NO.	21702
		DATE	SCALE 1:24
FOR	CLARENDON COUNTY FIRE DEPARTMENT MANNING,SOUTH CAROLINA	12DEC08	DRAWN BY AIV
		05MAR09	CHK'D BY DCA
DRWG. NO.	21702AD	SHEET NO. 1 OF 1	SHEET SIZE D

View File Created 06-MAR-2009 07:43:51