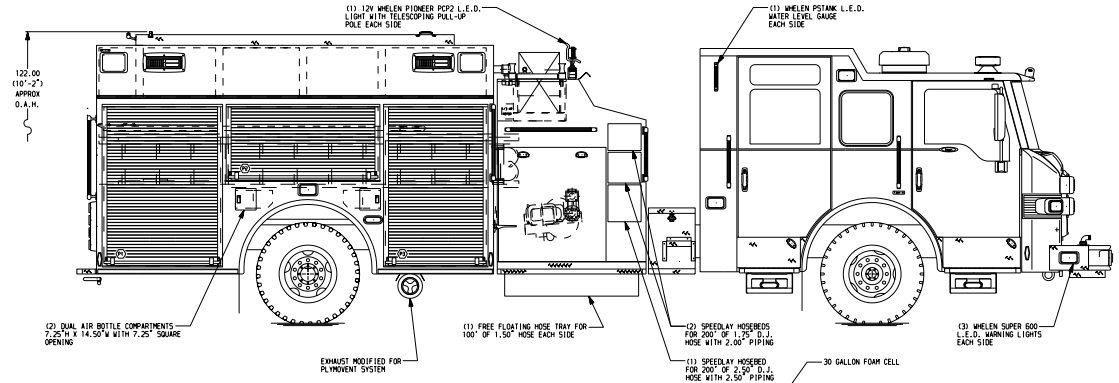

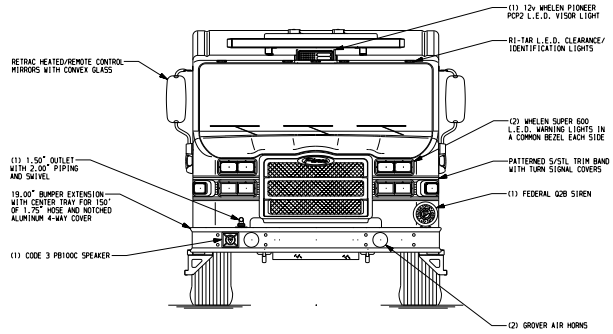

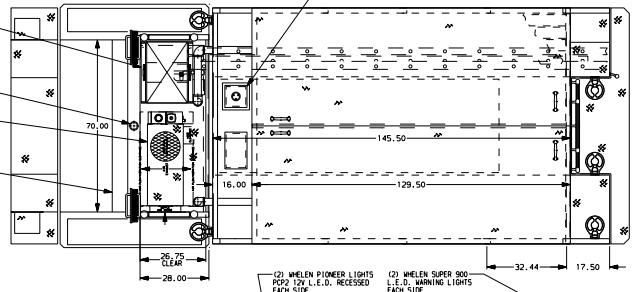

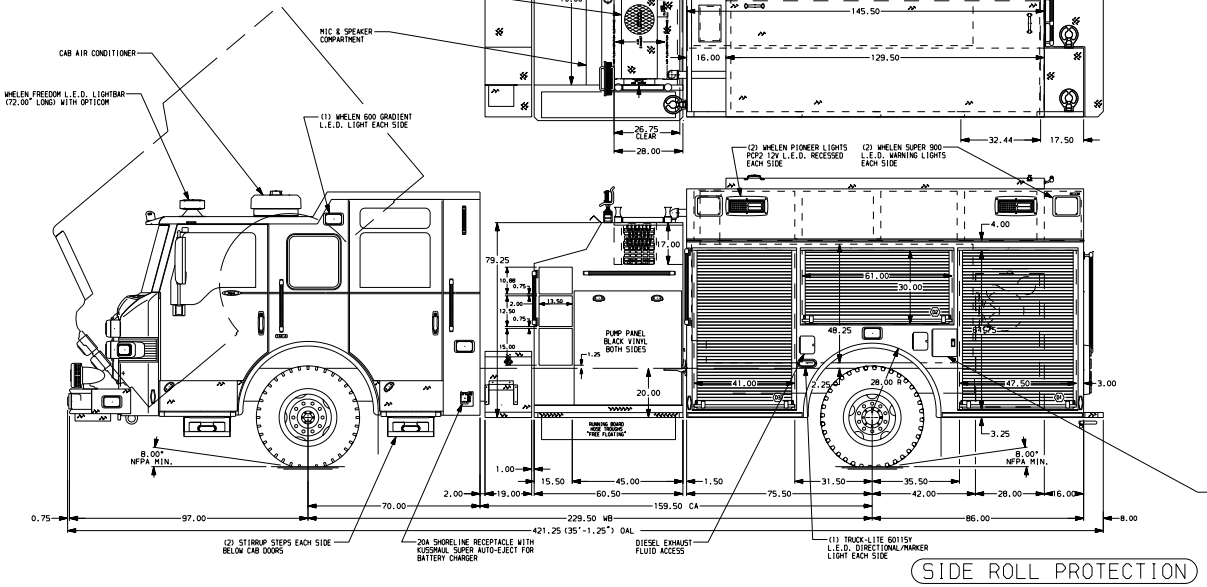

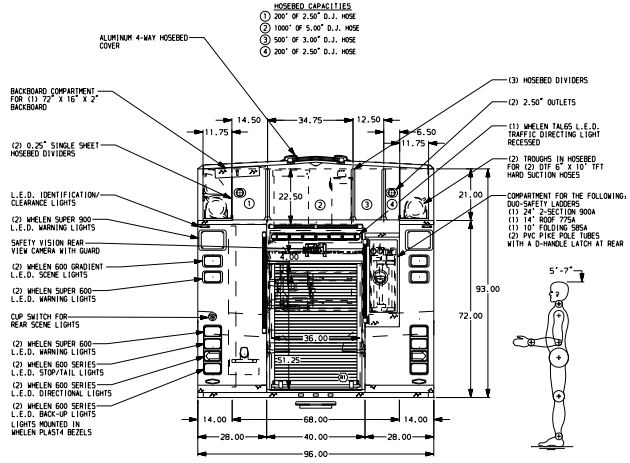

ALUMINUM BODY

MAXIMUM O.A.H. 122.00"

SIDE ROLL PROTECTION

FRONTAL IMPACT PROTECTION

NOTE

DIMENSIONS SHOWN ARE APPROXIMATE AND ARE SUBJECT TO MINOR DEVIATIONS AS MAY OCCUR OR BE NECESSARY IN CONSTRUCTION.
MINOR DETAILS NOT SHOWN.

1. PIERCE LOGO MUDFLAPS LOCATED FRONT AND REAR
2. S/STL FENDER CROWNS LOCATED FRONT AND REAR
3. 4-WAY ALUMINUM ON CAB ROOF
4. MOUNTING BASE FOR ANTENNA LOCATED PER SHOP ORDER
5. KUSSMAUL BATTERY CHARGER LOCATED IN COMPARTMENT D3
6. BATTERY CHARGE INDICATOR LOCATED ON D.S. SEAT RISER WITH BRACKET
7. S/STL SCUFFPLATE AT EACH CAB DOOR JAMB
8. PULL STRAP ON DOOR IN COMPARTMENTS D1, D2, D3, P1, P2, P3 & R1
9. S/STL GAURD FOR ROLL-UP DOOR IN EACH BODY COMPARTMENT
10. ONE FLOOR MOUNTED SLIDE-OUT TRAY IN COMPARTMENTS D1, D3, P1, P3 & R1
11. ONE ADJUSTABLE SLIDE-OUT TRAY IN COMPARTMENTS D1 & D3
12. ONE ADJUSTABLE TILTING SLIDE-OUT TRAY IN COMPARTMENTS D2 & D3
13. ONE ADJUSTABLE SHELF IN COMPARTMENTS P1, P3 & R1
14. PERIMETER SCENE LIGHTS LOCATED PER SHOP ORDER
15. CIRCUIT BREAKER PANEL LOCATED IN COMPARTMENT D3
16. ONE HANNAY ELECTRIC REWIND CORD REEL MODEL 1616-17-18 LOCATED IN COMPARTMENT R1 WITH 150' OF 10/3 CABLE AND CIRCLE-D JUNCTION BOX
17. ONE 20A TWISTLOCK RECEPTACLE LOCATED ON D.S. PUMP PANEL
18. ONE SWING-OUT TOOLBOARD IN COMPARTMENT P2
19. HYDRAULIC RESERVOIR FOR HUSKY 12 FOAM SYSTEM LOCATED IN PUMPHOUSE
20. TWO WHELEN 700 35W HALOGEN SCENE LIGHTS MOUNTED BELOW TAILBOARD
21. ONE VERTICAL PARTITION LOCATED IN COMPARTMENT D3

CUSTOMER APPROVAL

APPROVED BY: _____

DATE: _____

REV	DATE	BY	CH
1	26SEP11	MBO	JGO
0	08SEP11	MBO	JGO

CHASSIS DATA	
MAKE	PIERCE
MODEL	IMPEL

Pierce MANUFACTURING INC.

TITLE	1500-D-750P, 30 GALLON FOAM CELL, 161" LONG BODY (3) SPEEDLAYS, LADDER BESIDE TANK, HUSKY 12 FOAM SYS
FOR	SPARTANBURG FIRE DEPARTMENT SPARTANBURG, SC
DWG NO.	24966AD

JOB NO.	24966
SCALE	1:24
DRAWN BY	MBO
DATE	01JUL11
CHECKED BY	MNE
DATE	7/11/11
SHEET SIZE	D
SHEET NO.	1 OF 1

View File Created 26-SEP-2011 08:53:20