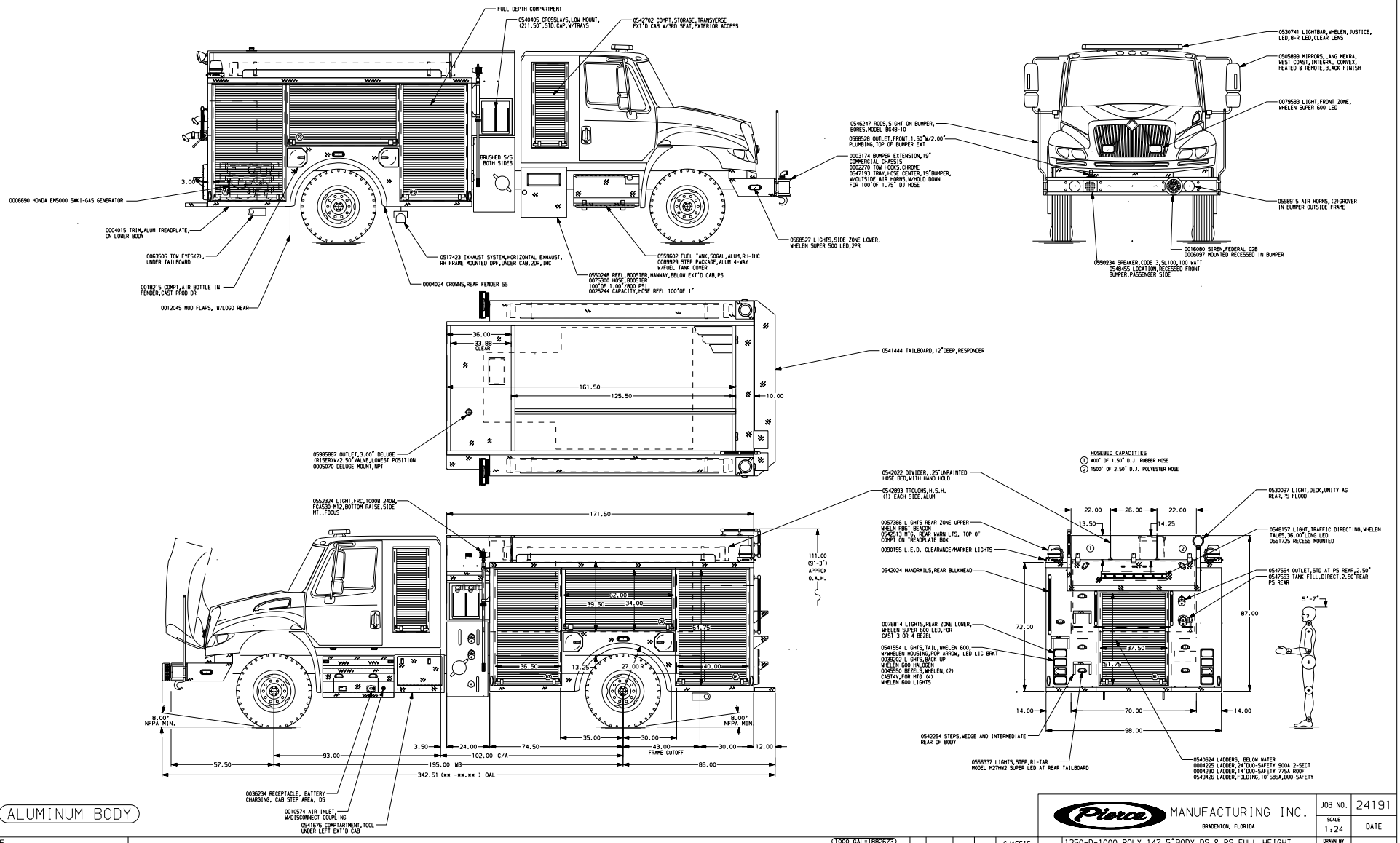

ALUMINUM BODY

NOTE
DIMENSIONS SHOWN ARE APPROXIMATE AND ARE SUBJECT TO MINOR DEVIATIONS AS MAY OCCUR OR BE NECESSARY IN CONSTRUCTION.
MINOR DETAILS NOT SHOWN.

(1000 GAL=1882673)

REV	DATE	BY	CH
2	22FEB11	AIV	BXR
1	17JAN11	AIV	PK1

CHASSIS DATA
MAKE: IHC
MODEL: 4400

Pierce MANUFACTURING INC.
BRADENTON, FLORIDA

TITLE: 1250-D-1000 POLY 147.5"BODY DS & PS FULL HEIGHT (2)SPEEDLAYS
FOR: BUFFALO FD, BUFFFALO, SOUTH CAROLINA
DWG NO. 24191AD

JOB NO. 24191
SCALE 1:24
DATE
DRAWN BY AIV 8DEC10
CHECKED BY DTA 4/1/11
SHEET SIZE D
SHEET NO. 1 OF 1

View File Created 07-APR-2011 11:00:43