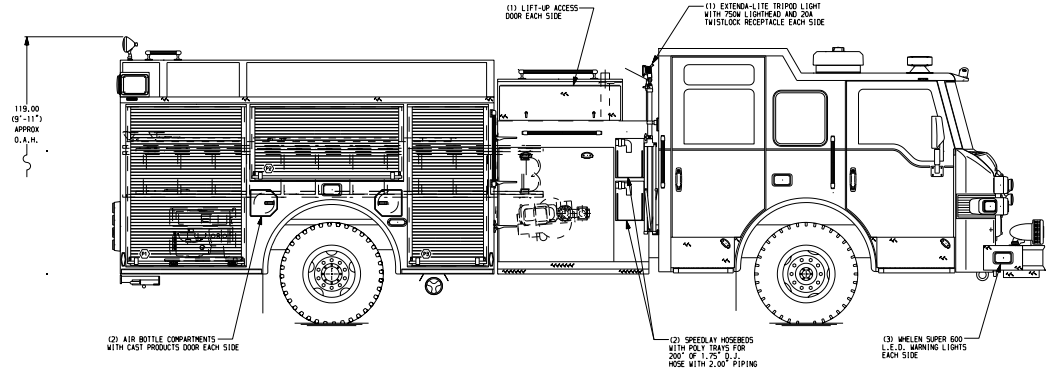

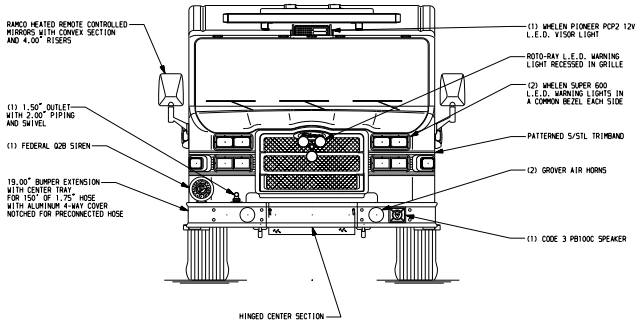

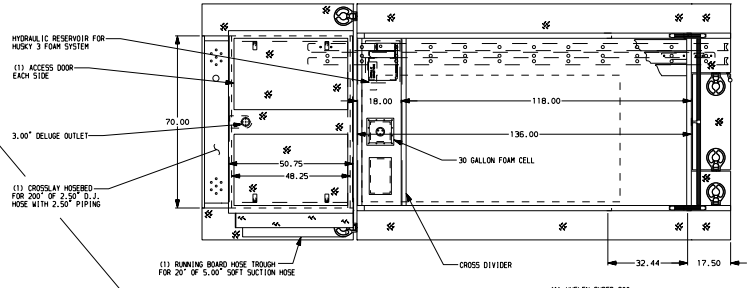

HOSEBED CAPACITIES
1. 200' OF 2.50" D.J. POLY HOSE
2. 200' OF 2.50" D.J. POLY HOSE
3. 1200' OF 5.00" D.J. POLY HOSE
4. 400' OF 3.00" D.J. POLY HOSE

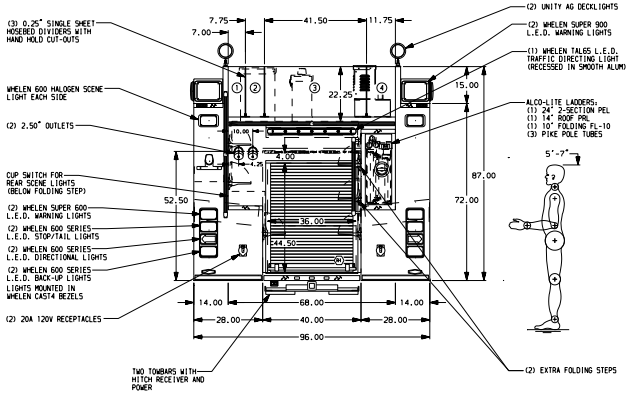

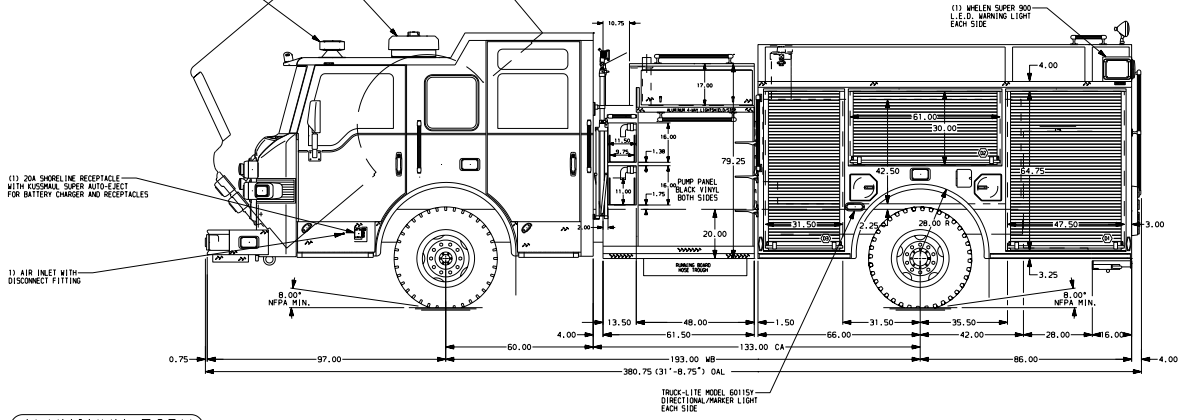

ALUMINUM BODY

NOTE

DIMENSIONS SHOWN ARE APPROXIMATE AND ARE SUBJECT TO MINOR DEVIATIONS AS MAY OCCUR OR BE NECESSARY IN CONSTRUCTION.
MINOR DETAILS NOT SHOWN.

1. PIERCE LOGO MUDFLAPS LOCATED FRONT AND REAR
2. S/STL FENDER CROWNS LOCATED FRONT AND REAR
3. MOUNTING BASES FOR ANTENNAS LOCATED PER SHOP ORDER
4. S/STL PROTECTIVE GUARD FOR EACH ROLL-UP DOOR
5. KUSSMAUL BATTERY CHARGER LOCATED IN COMPARTMENT D3
6. ONE FLOOR MOUNTED TRAY W/O SIDES IN COMPARTMENT P1
7. ONE FLOOR MOUNTED SLIDE-OUT TRAY IN COMPARTMENTS D1 & R1
8. ONE ADJUSTABLE SLIDE-OUT TOOL BOARD IN COMPARTMENT P1
9. BOLT-IN PARTITION BETWEEN COMPARTMENTS D1-R1 & P1-R1
10. HORIZONTAL EQUIPMENT MOUNTING TRACKS IN COMPARTMENTS D2, D3 & P2
11. ONE VERTICAL PARTITION IN COMPARTMENT P1
12. ONE ADJUSTABLE SHELF IN COMPARTMENTS D1, P1, R1 & TWO IN D3
13. PERIMETER SCENE LIGHTS LOCATED PER SHOP ORDER
14. HONDA EM5000 SKX1 GASOLINE GENERATOR LOCATED ON FLOOR MOUNTED TRAY IN COMPARTMENT P1
15. CIRCUIT BREAKER PANEL IN COMPARTMENT D3
17. ONE 20A 120V DUPLEX RECEPTACLE IN EMS COMPARTMENT

REV	DATE	BY	CH
07FEB11	MBO	TWH	
05JAN11	MBO	TWH	

CUSTOMER APPROVAL
APPROVED BY:
DATE:

Pierce MANUFACTURING INC.

CHASSIS DATA	
MAKE	PIERCE
MODEL	CONTENDER
TITLE	1500-D-750P, 30 GALLON FOAM CELL, 152" MEDIUM BODY (2) SPEEDLAYS, (1) X-LAY, LADDERS BESIDE TANK
FOR	BEAUFORT FIRE DEPARTMENT BEAUFORT, SC
DWG NO.	24083AD

JOB NO.	24083
SCALE	1:24
DATE	
DRAWN BY	MBO 18NOV10
CHECKED BY	MNE 22NOV10
SHEET SIZE	D
SHEET NO.	1 OF 1

View File Created 07-FEB-2011 09:53:58