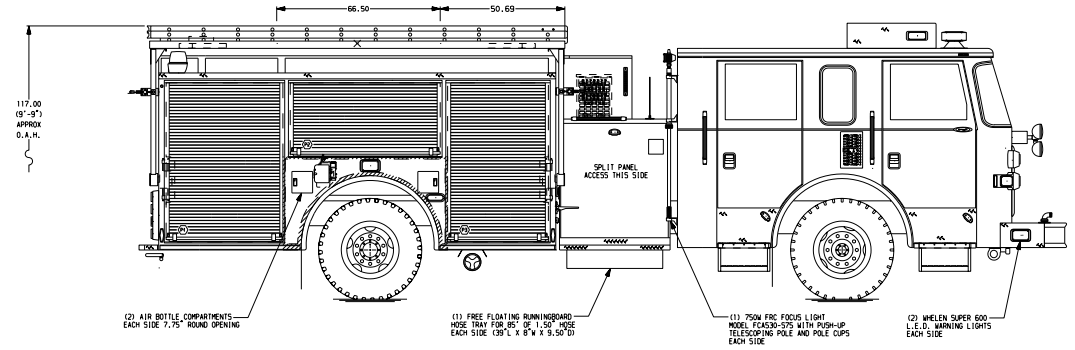

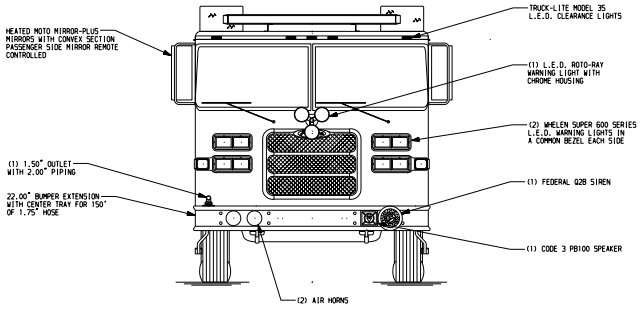

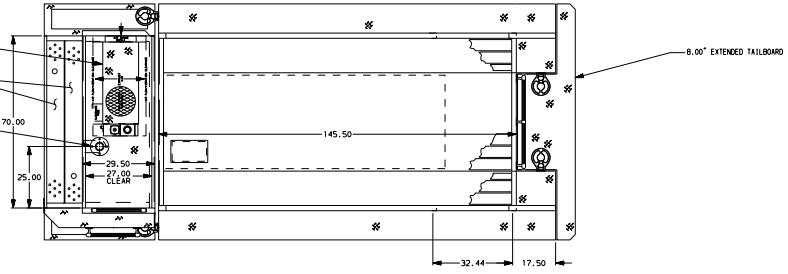

HOSEBED CAPACITIES
1. 200' OF 1.75" D.J. POLY HOSE
2. 600' OF 5.00" D.J. POLY HOSE
3. 600' OF 2.50" D.J. POLY HOSE
4. 200' OF 1.75" D.J. POLY HOSE

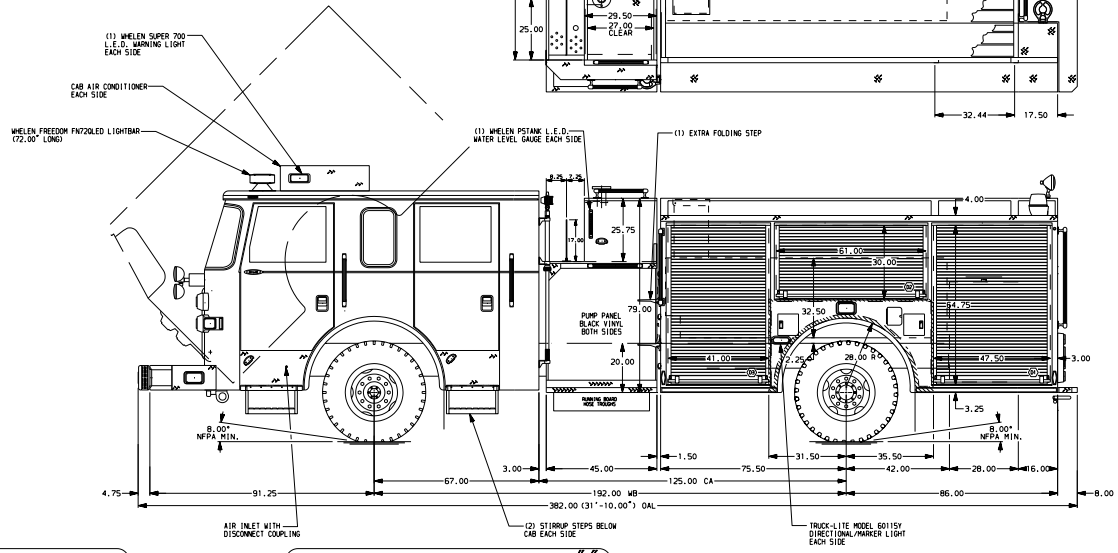

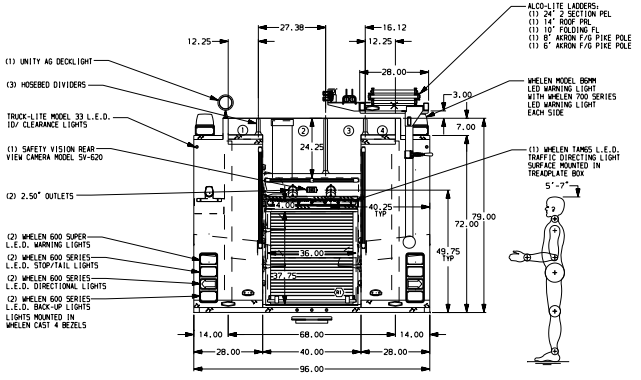

ALUMINUM BODY

MAXIMUM O.A.H. 118.00"

NOTE
DIMENSIONS SHOWN ARE APPROXIMATE AND ARE SUBJECT TO MINOR DEVIATIONS AS MAY OCCUR OR BE NECESSARY IN CONSTRUCTION.
MINOR DETAILS NOT SHOWN.

1. PIERCE LOGO MUDFLAPS LOCATED FRONT AND REAR
2. S/STL FENDER CROWNS LOCATED FRONT AND REAR
3. MOUNTING BASE FOR ANTENNA LOCATED PER SHOP ORDER
4. ONE FLOOR MOUNTED SLIDE-OUT TRAY IN COMPARTMENT D1
5. ONE ADJUSTABLE TILTING SLIDE-OUT TRAY IN COMPARTMENTS D2 & P2
6. ONE ADJUSTABLE SLIDE-OUT TOOL BOARD IN COMPARTMENT P1
7. ONE VERTICAL PARTITION WITH PEGBOARD IN COMPARTMENT P1
8. ONE ADJUSTABLE SHELF (FULL DEPTH/FULL WIDTH) IN COMPARTMENTS D1, R1, TWO IN D3, P1 & P3
9. SHELF TRACKS LOCATED IN COMPARTMENTS D1, D2, D3, P1, P2, P3 & R1
10. L.E.D. PERIMETER SCENE LIGHTS LOCATED PER SHOP ORDER
11. CIRCUIT BREAKER PANEL IN COMPARTMENT D3

REV	DATE	BY	CH
V	26OCT09	MBO	WKL
V	07OCT09	MBO	WKL
V	05AUG09	MBO	WKL

CUSTOMER APPROVAL
APPROVED BY:
DATE:

Pierce MANUFACTURING INC.

CHASSIS DATA
MAKE: PIERCE
MODEL: AXT6700

TITLE: 1500-D-500P, 161" FULL DEPTH BODY, SIDE CONTROL (2) CROSSLAYS, DELUGE, HYDRAULIC LADDER RACK
FOR: WADE HAMPTON FIRE DEPARTMENT GREENVILLE, SC
DWG NO. 22576AD

JOB NO. 22576
SCALE 1:24
DATE
DRAWN BY MBO 29JUL09
CHECKED BY WKL 04AUG09
SHEET SIZE D
SHEET NO. 1 OF 1

View File Created 26-OCT-2009 12:59:42