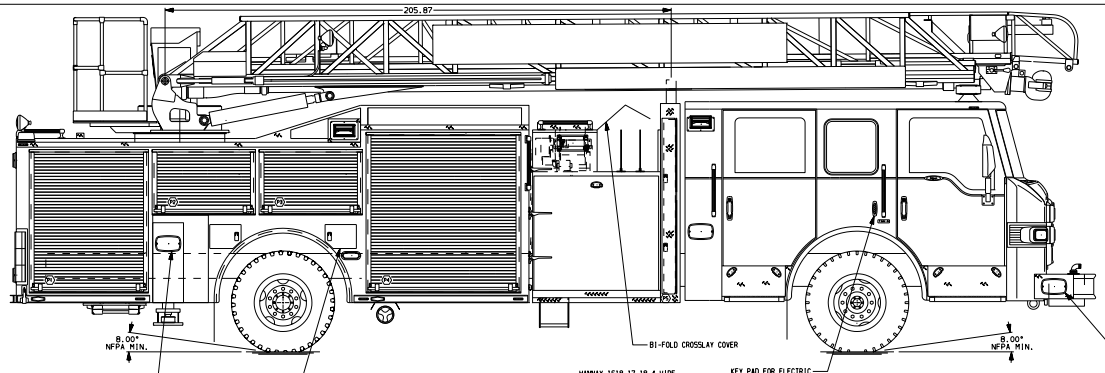

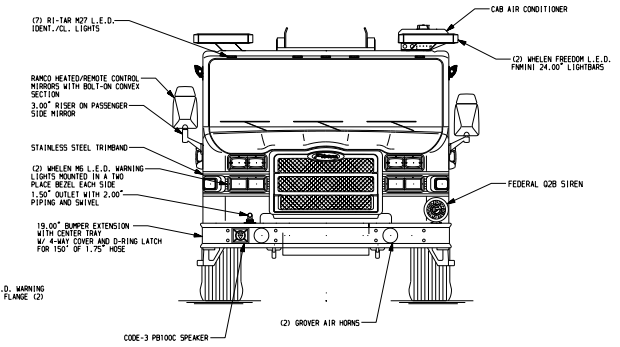

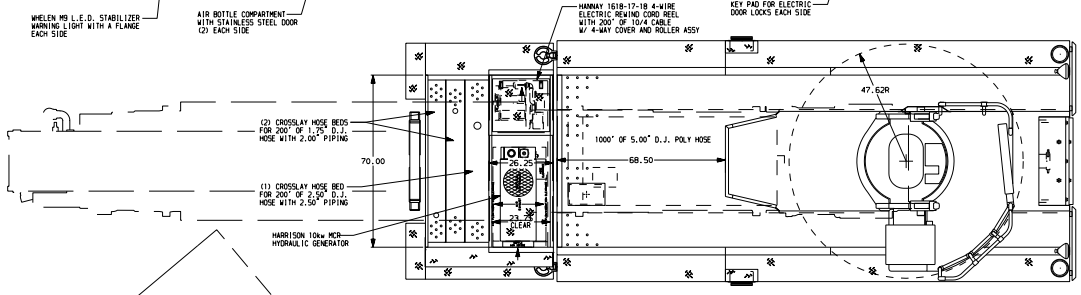

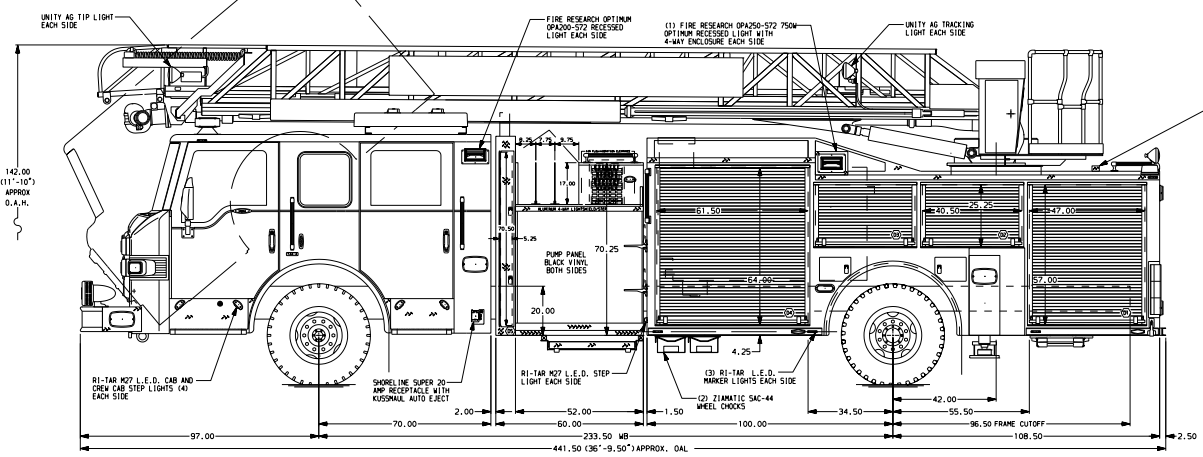

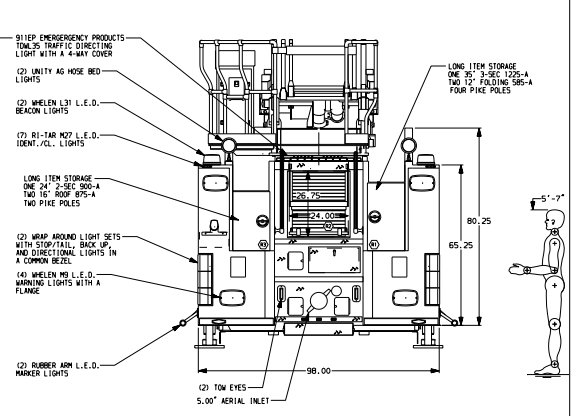

ALUMINUM BODY | SIDE ROLL PROTECTION | FRONTAL IMPACT PROTECTION

NOTE

DIMENSIONS SHOWN ARE APPROXIMATE AND ARE SUBJECT TO MINOR DEVIATIONS AS MAY OCCUR OR BE NECESSARY IN CONSTRUCTION.
MINOR DETAILS NOT SHOWN.

1. AIR INLET WITH DISCONNECT COUPLING MOUNTED IN DRIVER SIDE STEP WELL
2. MUD FLAPS WITH PIERCE LOGO FRONT AND REAR
3. STAINLESS STEEL FENDER CROWNS ON CAB AND REAR BODY
4. MOUNTING BASE FOR ANTENNA LOCATED PER SHOP ORDER
5. BATTERY CHARGER LOCATED IN CREW CAB SEAT RISER
6. BATTERY CHARGER INDICATOR MOUNTED ON DRIVER'S SEAT
7. 500 LB. FLOOR MOUNTED SLIDE-OUT TRAY WITH 2" SIDES IN COMPARTMENT-D1,D4,P1,P4
8. SCUFFPLATE,5/5,CAB DOOR JAMBS
9. 500 LB. ADJUSTABLE SHELVES IN COMPARTMENT-D1,D4,P1,P4
10. AMDOR L.E.D. COMPARTMENT LIGHTS LOCATED PER SHOP ORDER
11. PERIMETER SCENE LIGHTS LOCATED PER SHOP ORDER
12. CIRCUIT BREAKER PANEL IN COMPARTMENT-D4
13. EBERHARD FOLDING STEPS MOUNTED ON THE AERIAL DEVICE PER SHOP ORDER
14. 120V POWER TO AERIAL TIP
15. RADIO INTERCOM SYSTEM MOUNTED PER SHOP ORDER
16. AERIAL PEDESTAL RAISED 1.50"
17. LIFTING EYE, ROPE RESCUE ATTACHMENT AT AERIAL TIP

REV	DATE	BY	CH
B	22OCT09	BST	GRM
A	28SEP09	MMC	JBL

CUSTOMER APPROVAL
APPROVED BY: _____
DATE: _____

Pierce MANUFACTURING INC.

CHASSIS DATA
MAKE: PIERCE
MODEL: IMPEL

TITLE: 75' HAL QUINT AERIAL LADDER AND BODY ASSEMBLY
500 GALLON WATER TANK
FOR: PIERCE STOCK
APPLETON, WI

DWG NO. 22717AD

JOB NO.	22717
SCALE	1:24
DATE	
DRAWN BY	MMC
CHECKED BY	JBL
SHEET SIZE	D
SHEET NO.	1 OF 1

View File Created 22-OCT-2009 07:44:15